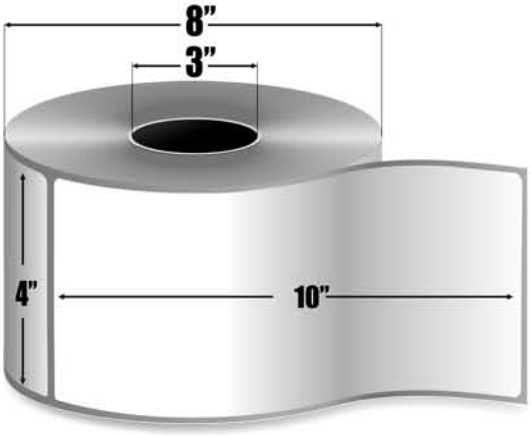

PART NUMBER 70P*BTM4100AP

4" X 10" TT BLANK (WHITE) LABELS ON A 3" CORE
ON A 3" CORE - PERFORATED

4" X 10" Thermal transfer blank (white) labels. 3" core. Perforated. Compatible with most Datamax and Zebra printers as well as other industrial sized printers. 605 labels per roll with 4 rolls in a box.

These thermal transfer labels must be used with thermal ribbons.

SPECIFICATIONS

MATERIAL	Thermal Transfer
WOUND	Out
COLOR	Blank (White)
FORMAT	Roll
WIDTH	4”
LENGTH	10”
PERFORATION	Perforated
PART NUMBER	70P*BTM4100AP
Uline Compatible Part#	S-7993
Zebra Compatible Part#	NA

RECOMMENDED PRINTERS

Datamax, Datamax A-4212, Datamax A-4310, Datamax A-4408, Datamax A-4606, Datamax A-6212, Datamax A-6310, Datamax H-4212, Datamax H-4212(X), Datamax H-4310, Datamax H-4310(X), Datamax H-4408, Datamax H-4606, Datamax H-4606(X), Datamax H-6210, Datamax H-6212X, Datamax H-6308, Datamax H-6310X, Datamax H8308X, Datamax I-4208, Datamax I-4212, Datamax I-4308, Datamax I-4406, Datamax I-4604, Datamax M-4206, Datamax M-4210, Datamax M-4308, Zebra, Zebra 105SL, Zebra S4M, Zebra ZM400, Zebra ZM600,

Copyright © 2012 Kroy, LLC. All rights reserved.